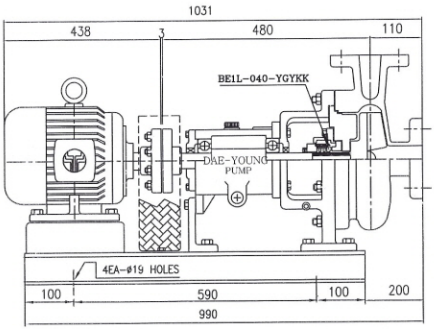

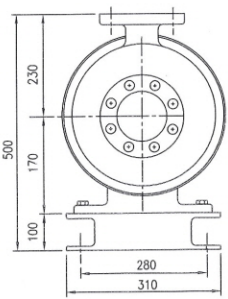

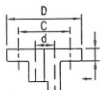

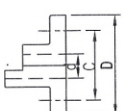

FLANGE DIMENSIONS

	Rating	D	C	d	t	f
Suction	ks1511	185	150	80	22	8-ø19
Discharge	ks1511	175	140	65	22	4-ø19

*제작시 치수 변동이 생길수 있습니다.
*참고-공회전 절대 금지 하시오.

No.	Part Name	Material	Size	Q'ty
PROJECT	DCFS-B형;VOLUTE PUMP ø80 x ø65			

CAPA QTY	0.6 m3/m	RPM	1740	DWG NO. 201		SCALE
HEAD	18 M	S.T	1	DRAWN	CHECKED	REVIEWED	APPROVED
MOTOR	5.5 KW	M/S	ø40	B/H			
CUSTOMER							

DAE YOUNG ACID-PROOF PUMP — 3RD ANGLE

DRAWING DATE = 199

AutoCAD Aplication // CadPro V5.0 A4 (210 x 297)

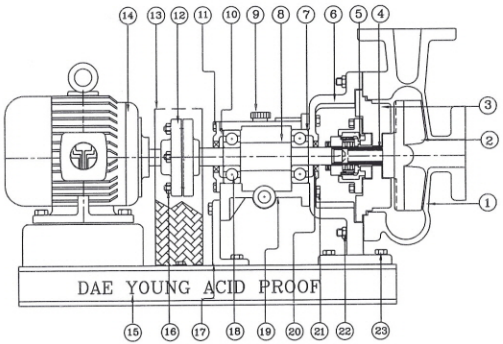

No.	Part Name	Material	Size	Q'ty
23	**Bracket Bolt**	SUS304	M12	4 ea
22	Stud Bolt	SUS304	M10	8 ea
21	Housing Bolt	SUS304	M12	4 ea
20	Retainer Ring	NBR	ø35xø55xBt	2 ea
19	Bearing Housing	GC 20		1 ea
18	Ball Bearing	STS 2	# 6307	1 ea
17	Support	GC 20		1 ea
16	Coupling Bolt	**SM41C**	M12	6 ea
15	Base	SB 41		1 ea
14	Motor	**5.5 kw 4P**	220/380v	1 ea
13	Coupling Cover	SUS304		1 ea
12	Coupling	GC 20		1 ea
11	Bearing Cover Bolt	SUS304	M8	4 ea
10	Bearing Cover	GC 20		2 ea
9	Oil Cap	**PP**	PS 1/2"	1 ea
8	Shaft	SUS304		1 ea
7	Ball Bearing	STS 2	# 6307	1 ea
6	**Bracket**	GC 20		1 ea
5	Mechanical Seal	**BEIL-040-YGYKK**		1 ea
4	Sleeve	FRP		1 ea
3	Casing Cover	FRP		1 ea
2	Impeller	FRP		1 ea
1	Casing	FRP		1 ea

PROJECT: DCFS-B형;VOLUTE PUMP

ø80 x ø65

CAPA. QTY	0.6 m3/m	RPM	1740	DWG NO.	201		SCALE
HEAD	18 m	S.T	1	DRAWN	CHECKED	REVIEWED	APPROVED
MOTOR	5.5 KW	M/S	ø40	B/H			
CUSTOMER							

DAE YOUNG ACID-PROOF PUMP — 3RD ANGLE

AutoCAD Aplication // CadPro V5.0 A4 (210 x 297)

DRAWING DATE = 199

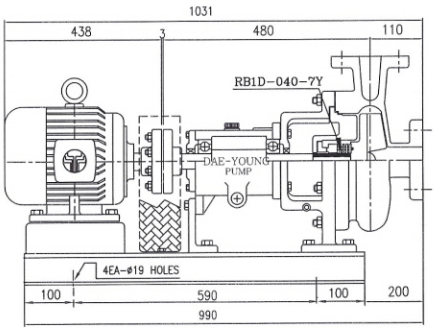

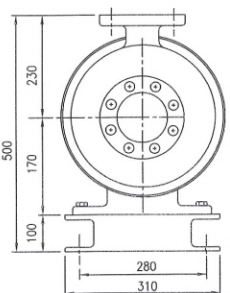

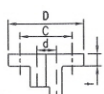

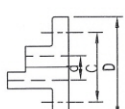

FLANGE DIMENSIONS

	Rating	D	C	d	t	f
Suction	ks1511	185	150	80	22	8-ø19
Discharge	ks1511	175	140	65	22	4-ø19

*제작시 치수 변동이 생길수 있습니다.
*참고-공회전 절대 금지 하시오.

No.	Part Name	Material	Size	Q'ty
PROJECT	DCFS-B형;VOLUTE PUMP ø80 x ø65			

CAPACITY	0.6 m3/m	RPM	1740	DWG NO. 201	SCALE
HEAD	18 M	S.T	1	DRAWN / CHECKED / REVIEWED / APPROVED	
MOTOR	5.5 KW	M/S	ø40	B/H	
CUSTOMER					

DAE YOUNG ACID-PROOF PUMP — 3RD ANGLE

DRAWING DATE = 199

AutoCAD Aplication // CadPro V5.0 A4 (210 x 297)

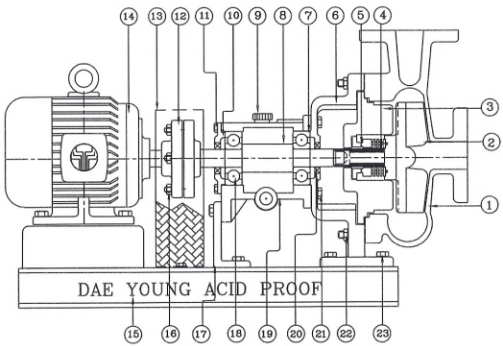

No.	Part Name	Material	Size	Q'ty
23	**Bracket Bolt**	SUS304	M12	4 ea
22	Stud Bolt	SUS304	M10	8 ea
21	Housing Bolt	SUS304	M12	4 ea
20	Retainer Ring	N B R	ø35xø55x8t	2 ea
19	Bearing Housing	GC 20		1 ea
18	Ball Bearing	STS 2	# 6307	1 ea
17	Support	GC 20		1 ea
16	Coupling Bolt	SM41C	M12	6 ea
15	Base	SB 41		1 ea
14	Motor	5.5 kw 4P	220/380v	1 ea
13	Coupling Cover	SUS304		1 ea
12	Coupling	GC 20		1 ea
11	Bearing Cover Bolt	SUS304	M8	4 ea
10	Bearing Cover	GC 20		2 ea
9	Oil Cap	PP	PS 1/2"	1 ea
8	Shaft	SUS304		1 ea
7	Ball Bearing	STS 2	# 6307	1 ea
6	**Bracket**	GC 20		1 ea
5	Mechanical Seal	RB1D-040-7Y		1 ea
4	Sleeve	F R P		1 ea
3	Casing Cover	F R P		1 ea
2	Impeller	F R P		1 ea
1	Casing	F R P		1 ea

PROJECT: DCFS-B형;VOLUTE PUMP
ø80 x ø65

CAPA CITY	0.6 m3/m	RPM	1740	DWG NO. 201			SCALE
HEAD	18 m	S.T	1	DRAWN	CHECKED	REVIEWED	APPROVED
MOTOR	5.5 kW	M/S	ø40	B/H			
CUSTOMER							

DAE YOUNG ACID-PROOF PUMP

3RD ANGLE

DRAWING DATE = 199

AutoCAD Aplication // CadPro V5.0 A4 (210 x 297)